BATTERY TECHNOLOGY

GIROTTO ANDREA

BCLC25 – CLOIF1

JANUARY 5, 2026

CONTENTS

History

How batteries work

Types of battery

Voltage & Current

Computing applications

Safety

HISTORY

- 1800 – Voltaic Cell
- 1836 – Daniell Cell
- 1859 – First rechargeable battery
- 1886 – First dry cell/alkaline battery
- 1960s – Modern alkaline batteries
- 1991 – Commercial lithium-ion battery
- Future – Solid-State battery

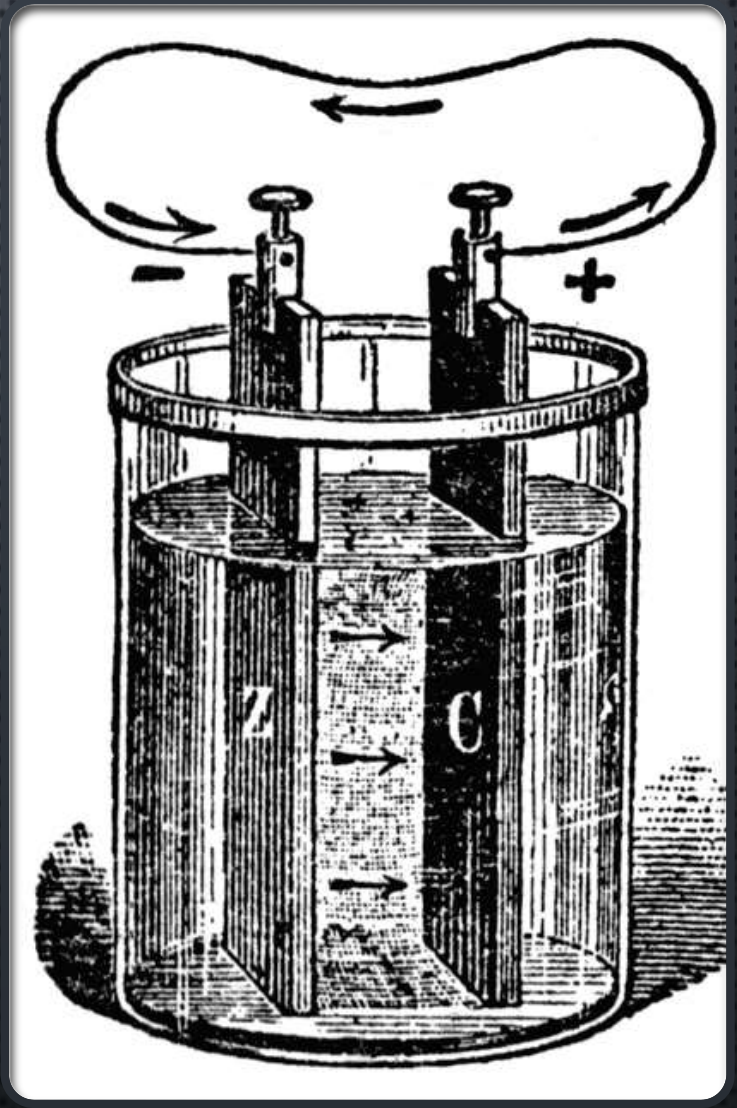

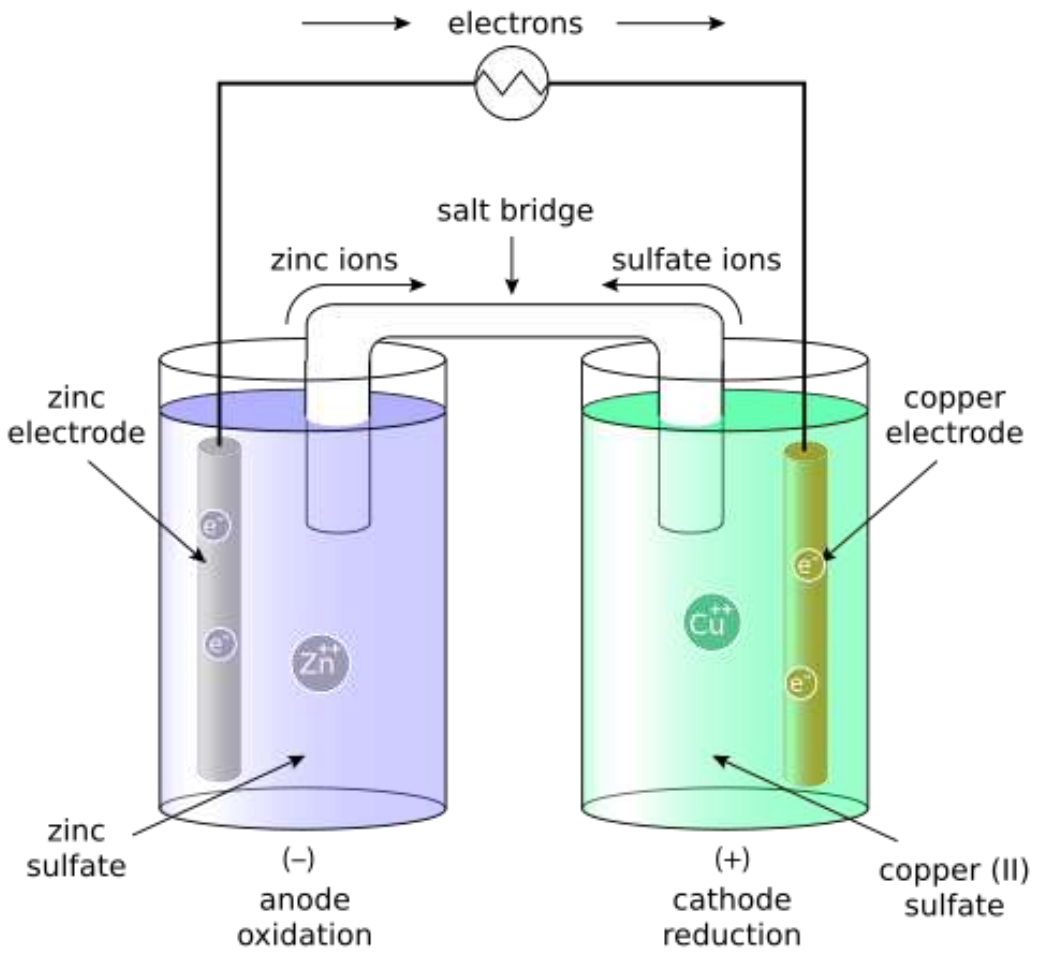

HOW BATTERIES WORK

TYPES OF BATTERY

Type	Voltage	Rechargeable	Usage	Why
Alkaline	1.5V	✗	Remote controls, mouse	Too weak for computing
Lead-Acid	12V	✓	Cars, UPS systems	High current, proven reliable
Li-ion	3.6-3.7V	✓	Laptops	Perfect energy density
LiPo	3.6-3.7V	✓	Tablets, phones	Custom shape, thinner
Solid-State	3.8-4.2V	✓	Electric cars	More energy, safer

Voltage and Current

- Voltage (V) - Electrical Potential Difference
- Current (A) - Flow of Electrons
- Power (W) - Energy Rate
- Capacity (mAh/Ah) - Total Charge Storage
- Energy (Wh) = Voltage × Capacity

KEY SPECIFICATIONS

Cycle of life	Number of complete charge-discharge
Self-Discharge	Energy loss when battery is not being used/charged
Operating temperature range	Safe temperature window for battery operation
Energy density (Wh/kg)	Amount of energy per unit weight, expressed as Wh/kg

TYPES OF CONFIGURATION

- SINGLE CELL
- SERIES CONNECTION
- PARALLEL CONNECTION
- BATTERY PACK

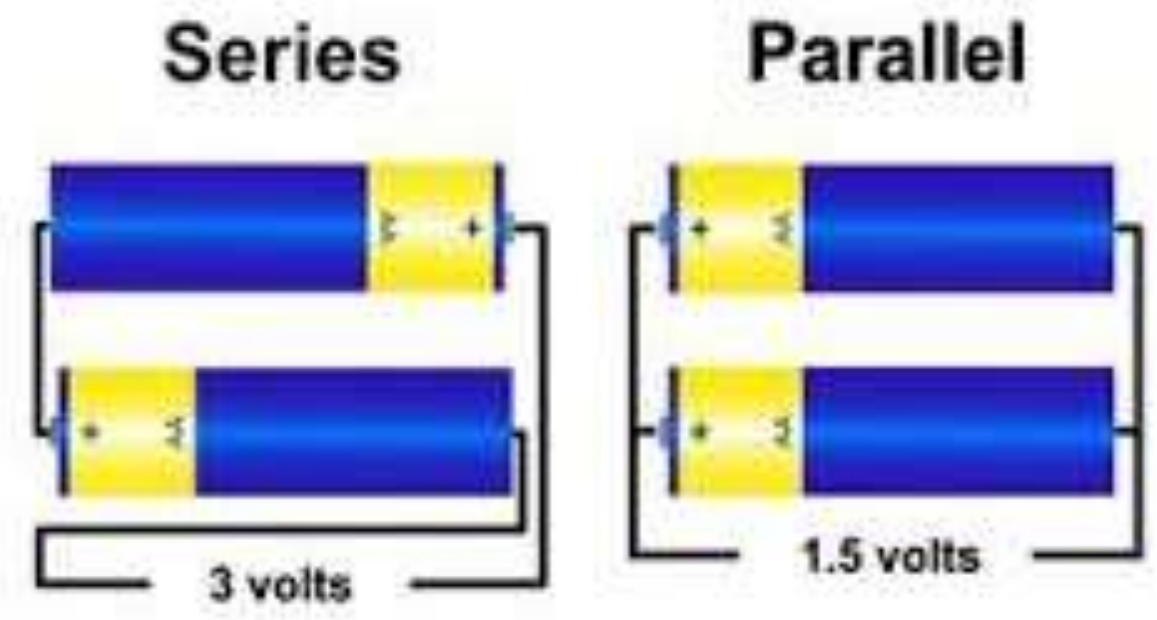

BATTERY TECHNOLOGY IN CLOUD INFRASTRUCTURE

- Lead-Acid
- Lithium-Ion
- UPS
- Battery Management System

SAFETY CONSIDERATIONS

Risk

Fire

Chemical Burns

Toxic Fumes

Safety Rules

Swelling

Keep cool

Never trash batteries

SDK
SuperDrecksKëscht®
ecobatterien
association sans but lucratif
www.ecobatterien.lu

THANK YOU